Data Sheet

10W 915nm Uncooled Multimode Laser Diode Module

TY-915+/-10NM-10.0W-25C-2PIN-1064-0.15NA-DF-01

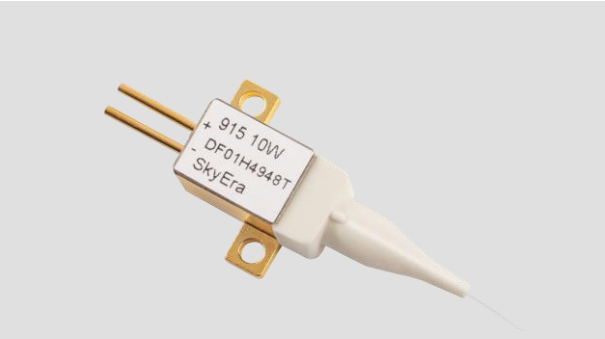

SkyEra delivers TY-915+/-10NM-10.0W-25C-2PIN-1064-0.15NA-DF-01 diode lasers employing professional coupling technology, that enjoy multiple advantages, e.g., compact design, stable output power, high power, high efficiency and convenient packaging. These laser diode modules can provide solutions for fiber laser applications and direct suppliers.

The performance and aging tests have been performed upon the production line to guarantee reliable, stable and long lifetime of products. To provide customers with high-quality, high cost performance products is the company's goal.

Key Parameters:

- Based on single fire spot laser module
- High output power 10W
- High stability
- 0.15NA 105μm core multimode fiber
- Parallel weld 2-Pin sealed package
- Standard central wavelength 915nm
- RoHS compliance

Application:

- Medical
- Printing
- Pumping source
- Material processing

Specification：

Functional parameters are tested on condition that the heat sink temperature is 25 degree, contact resistance of the component and the heat sink is smaller than 1CM^2 K/W.

Parameter	Min	Typ	Max	Unit	Conditions
Output Power	10	-	-	W	
Centre Wavelength TY915-DG		915±10		nm	HR@ 1050-1150>25dB, HR@ 1060-1100>30dB
Spectral Width (FWHM)	-	3.5	7	nm	
Threshold Current	-	0.55	0.9	A	
Operating Current	-	11.7	12.5	A	
Operating Voltage	-	1.75	2.2	V	
Conversion Efficiency	-	48	-	%	
90% Power	-	0.13	-	NA	
Wavelength shift vs. Temperature	-	0.3	-	nm/℃	
Slop Efficiency	-	0.9	-	W/A	
Storage Temperature	-40	25	85	°C	Non-Condensing
Operating Temperature	-20	25	55	°C	
Fiber Bend Radius	37.5	-	-	mm	
Buffer Diameter	-	250	-	μm	
Cladding Diameter	-	125	-	μm	
Core Diameter	-	105	-	μm	
Numeric Aperture	-	0.15	-	-	
Fiber Connector	-	CO	-	-	SMA905,FC

2. Dimension Diagram

Unit: MM

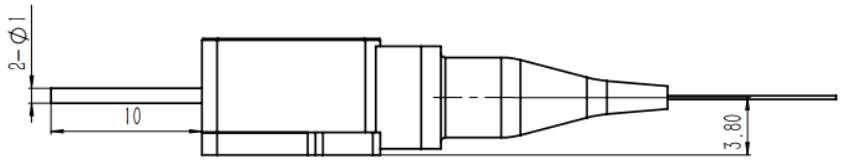

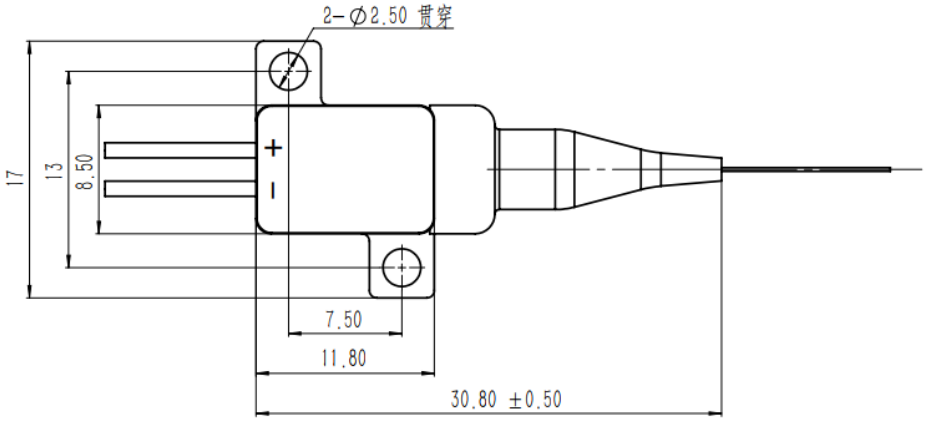

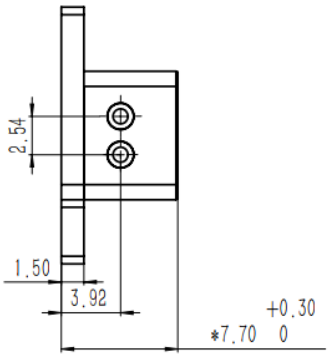

未注尺寸公差：±0.2mm

3. Instructions

- Avoid eyes or skin exposure to direct or scattered radiation;
- ESD protection is required for transportation, storage and operation; short-circuit protection between pins is required for transportation and storage.
- Please connect pins by solder when operating current is over 6A; solder point should be close to the root of pins with a max soldering temperature at 260˚C and a duration less than 10 seconds ;
- Drive constant current power supply by laser and avoid surge while working;
- Operate under rated current and rated power;
- Good heat dissipation is required;
- Operating temperature is -20˚C~+55˚C;
- Storage temperature is －40˚C~＋85˚C.